Show Atelier

DIAPro ColorBeam 5R

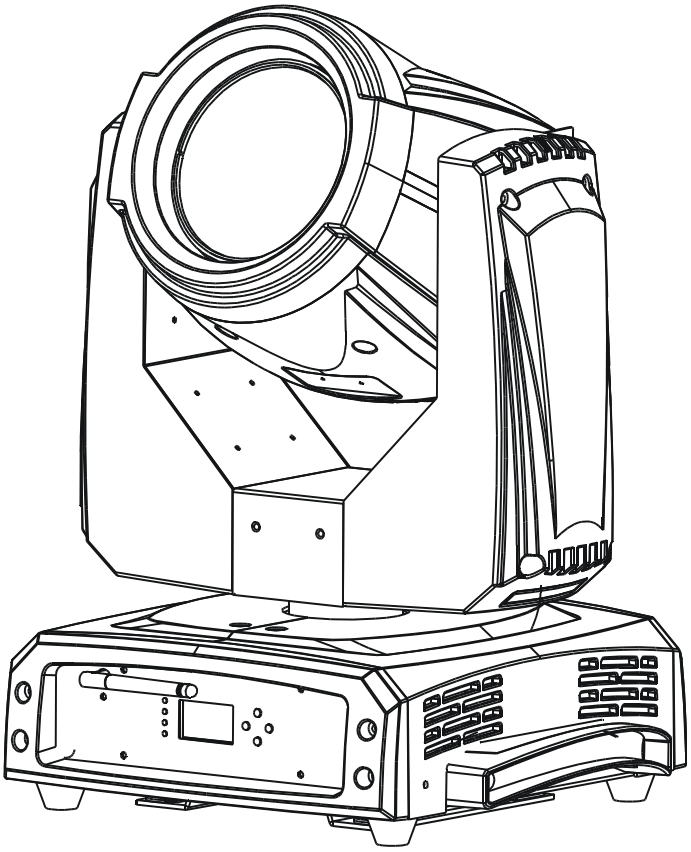

User Guide

Please read these instructions carefully before use

TABLE OF CONTENTS

1. Safety Instruction 2
2. Installation 3
3. Technical Specification 5
4. Description 8
   4.1 Description of the fixture 8
   4.2 Control Panel 8
5. Gobo-wheel and Lamp 10
   5.1 Gobos-wheel 10
   5.2 Lamp 10
   5.3 Change the Lamp 11
6. How To Set The Unit 12
   6.1 Power On Display 12
   6.2 Main Function 12
   6.3. Home Position Adjustment 24
   6.4. Error Information 26
7. Control By Universal DMX Controller 27
   7.1 Connection 27
   7.2 Channel Mode Setting 28
   7.3 Address Setting 29
   7.4 DMX 512 Configuration 29
   7.5 Lighting Library Download 37
8. Update Software 37
9. Troubleshooting 37
10. Maintenance and Cleaning 39

1. Safety Instruction

WARNING

Please read carefully the instruction manual, which includes important information about the installation, usage and maintenance.

Please keep this User Guide for future consultation. If you sell the unit to another user, be sure that they also receive this instruction manual.

Important:

Damages caused by the disregard of this user manual are not subject to warranty. The dealer will not accept liability for any resulting defects or problems.

- Unpack and check carefully that there is no transportation damage before using the unit.
- The unit is for indoor use only. Use only in a dry location.
- Do install and operate by qualified operator.
- DO NOT allow children to operate the fixture.
- Use safety chain when fixing the unit. Handle the unit by carrying its base instead of head only.
- The unit must be installed in a location with adequate ventilation, at least 50cm from adjacent surfaces.
- Be sure that no ventilation slots are blocked; otherwise the unit will be overheated.
- Before operating, ensure that the voltage and frequency of power supply matches the power requirements of the unit.
- It's important to ground the yellow/green conductor to earth in order to avoid electric shock.
- Maximum ambient temperature TA: 40℃. DO NOT operate it when the temperature is higher.
- DO NOT connect the device to any dimmer pack.
- During initial start-up some smoke or smell may arise. This is a normal process and does not necessarily mean that the device is defective, and it will decrease gradually within 15 minutes.
- Make sure there are no flammable materials close to the unit while operating to avoid fire hazard.
- Examine the power wires carefully; replace them immediately if there is any damage.
- Unit's surface temperature may reach up to 85℃. DO NOT touch the housing

bare-handed during its operation, and allow about 15 minutes for cooling the unit down before replacing bulb or maintenance as it could be very hot.

- Avoid any inflammable liquids, water or metal objects entering the unit. Once it happens, cut off the mains power immediately.
- DO NOT operate in dirty or dusty environment; do clean the fixture regularly.
- DO NOT touch any wire during operation as there might be a hazard of electric shock.
- Avoid power wires twist other cables.
- The minimum distance between light output and the illuminated surface must be more than 12 meters.
- Disconnect mains power before fuse/lamp replacement or servicing.
- Replace fuse/lamp only with the same type.
- In the event of serious operating problem, stop using the unit immediately.
- Never turn on and off the unit time after time.
- The housing, the lenses, or the ultraviolet filter must be replaced if they are visibly damaged.
- DO NOT open the unit as there are no user serviceable parts inside.
- Never try to repair the unit by yourself. Repairs carried out by unskilled people can lead to damage or malfunction. Please contact the nearest authorized technical assistance center if needed.
- Disconnect the mains power if the fixture is has not been used for a long time.
- Do use the original packing materials before transporting it once again.
- To prevent or reduce the risk of electrical shock or fire, do not expose the unit to rain or moisture.
- Hot lamp explosion hazard. Do not open the unit within 15 minutes after switching off.
- Do replace the bulb once it is damaged, deformed or life-expired.
- DO NOT look directly at the light while the bulb is on.
- Never touch bulb with bare fingers, as it is very hot after using.
- DO NOT start on the unit without bulb enclosure or when housing is damaged.

2. Installation

Unpacking the fixture (for flight case pack only)

1.Stop the flight case via the brake sheet above the wheels.

2.Unlock the lock modules (1) and open the cover board.

3.Prop the cover board with lid bracket.

4.Take out the fixture.

5.Unlock the lock module (2) take out omega clamps.

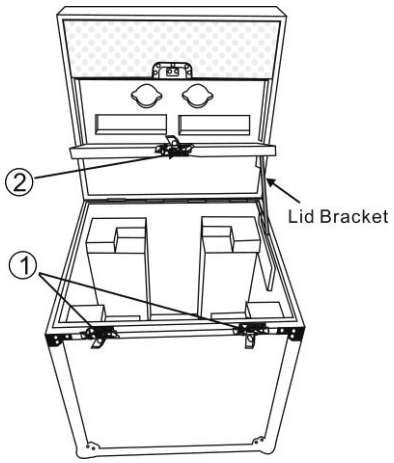

Installation:

1. Bolt each clamp (1) to the Omega holder with screw and lock nut through the hole in the holder.
2. Fasten the omega holders (2) on the bottom of the base by inserting quick-lock fasteners (3) into the holes of the base and tighten fully clockwise.
3. Hang the fixture to the support (4) through clamp and fasten the screws (5). Fasten the safety cable (6) through the bottom of the base and over the support.

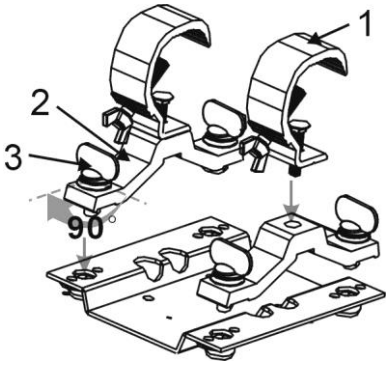

Fig.1

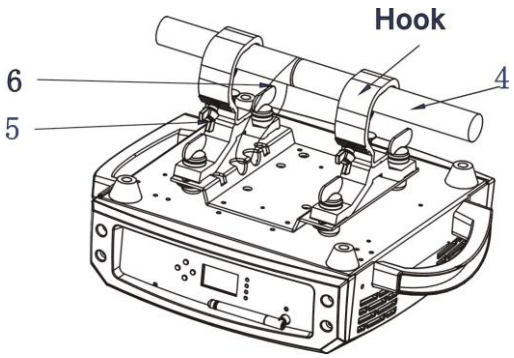

Fig.2

Attention:

- Always ensure that the structure to which you are attaching the unit is secure and is able to support a weight of 10 times of the unit's weight without any harming deformation.
- Also always use a safety cable that can hold 12 times of the weight of the unit when installing the fixture.
- Make absolute sure that the unit is firmly fixed in way that no vibrating or slipping would occur during operation.
- The equipment must be installed beyond the areas where persons may walk by or be

seated.

- The rigging has to be operated by or under the guide of a skilled person.

3. Technical Specification

Power supply

- 100~240V, 50/60Hz

Power Consumption

- 330W

Lamp

- Philips MSD Platinum 5R (8000K)

Battery backup display

- Setting DMX address or other functions without connecting to mains power.
- Battery for LCD display charges automatically when the fixtures connects to the mains power.
- No need to change battery.

Wireless control (for the unit with wireless receiver built-in only)

- Wirelessly controlled by W-DMX (option).
- Each W-DMX is sending out 512 channels of DMX.
- License free band of 2.45 GHz

Optical system

- High efficient Optical system.
- Delivering extremely powerful output.
- High quality lens.

Movement

- Pan: 540°
- Tilt: 270°
- Pan/Tilt moving speed adjustable.
- Automatic Pan/Tilt correction.
- Easy calibration and maintenance by magnetic home positioning.
- Pan/Tilt position lock for transporting protection.

Dimmer/Shutter

- Mechanical dimmer
- Mechanical shutter and adjustable speed strobe effect

Color wheel

- Color wheel: 14 fixed colors
- Rainbow effect in both directions.
- Easy calibration and maintenance by magnetic home positioning.

Gobo wheel

- Gobo Wheel: 17 fixed gobos, index able,
- Easy calibration and maintenance by magnetic home positioning.

Prism

-8-facet rotating prism Frost

Zoom: From 1°~ 3.8°

Focus: Electronic

Cooling:

- Fan cooling

Protocols

- DMX 512
- Data input/output: 3/5 Pin XLR socket

Dimension

- 415×344×538.5mm

Weight

- 19kg

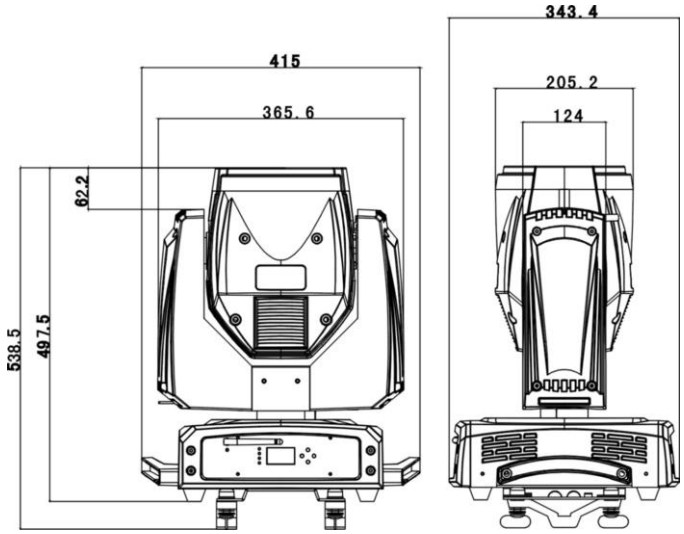

Photometric diagram

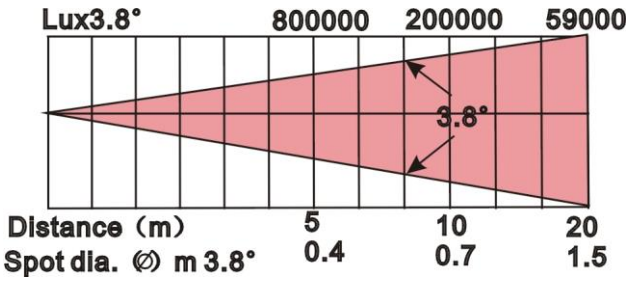

DMX Channels:

Mode / CH	Mode 1 19-CH	Mode 2 16-CH	Mode 3 20-CH
1	PAN	COLOUR WHEE	COLOUR WHEEL
2	PAN FINE	STOP / STROBE	STOP / STROBE
3	TILT	DIMMER	DIMMER
4	TILT FINE	STATIC GOBO CHANGE	STATIC GOBO CHANGE
5	PAN /TILT SPEED	PRISM INSERTION	PRISM INSERTION
6	FUNCTION	PRISM ROTATION	PRISM ROTATION
7	P/T MACRO	EFFECTS MOVEMENT	EFFECTS MOVEMENT
8	P/T MACRO SPEED	FROST	FROST
9	COLOR	FOCUS	FOCUS
10	GOBO	PAN	PAN
11	PRISM	PAN FINE	PAN FINE
12	R-PRISM	TILT	TILT
13	R-PRISM FINE	TILT FINE	TILT FINE
14	EFFECTS MOVEMENT	FUNCTION	FUNCTION
15	FOCUS	RESET	RESET
16	FROST	LAMP CONTROL (WITH OPTION "LAMP DMX" ON)	LAMP CONTROL (WITH OPTION "LAMP DMX" ON)
17	SHUTTER		PAN - TILT SPEED
18	DIMMER		COLOUR SPEED
19	DIMMER FINE		BEAM SPEED
20			GOBO SPEED

4. Description

4.1 Description of the fixture

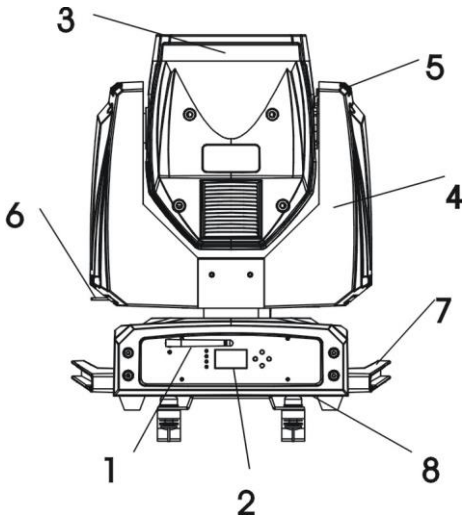

1.Antenna (for XP-5R BEAM-WT only)
2.Front panel
3.Head
4.Arm
5.Tilt arm self-locking handle
6.pan self-locking handle
7.Handle
8.Base

a. Tilt mechanism lock and release（every 45°）

b. pan mechanism lock and release（every 90°）

Caution: The head and arm must be unlocked before operation!

4.2 Control Panel

Front view

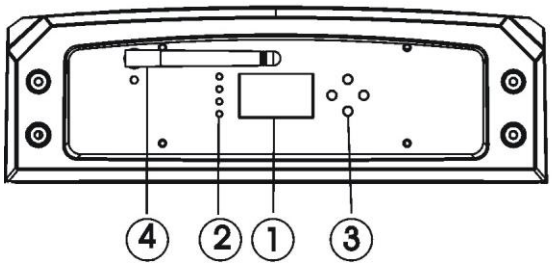

Rear view

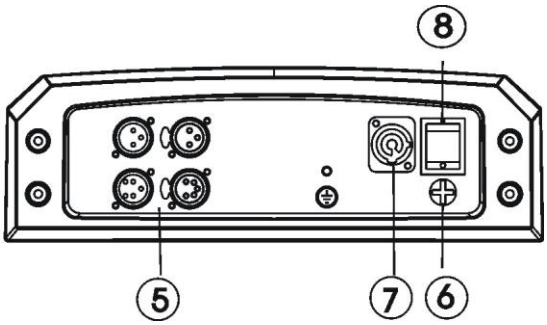

○,1 Monitor (Batter Back-up display):

○,2 LED:

POWER	ON	Power On
BATTERY	ON	Battery Status

WIRELESS	ON	Receive the wireless signal
DMX	ON	DMX input present

○,3 Button:

MENU	To enter into, move backward or leave the menu
▲ UP	Move up in the menu
▼ DOWN	Move down in the menu
ENTER	Enter the desired functions

○,4 Antenna (for XP-5R BEAM-WT only)**:**

Receive wireless signal from a wide range

○,5 DMX input/output:

For DMX 512 operation, use 3/5-pin XLR plug cable to link the units together

○,6 Fuse (T 5 A):

Protect the unit from damage of overcurrent.

○,7 Power Cable:

To connect to the mains supply

○,8 Power Switch:

Turns On/Off the power

5. Gobo-wheel and Lamp

5.1 Gobo-wheel

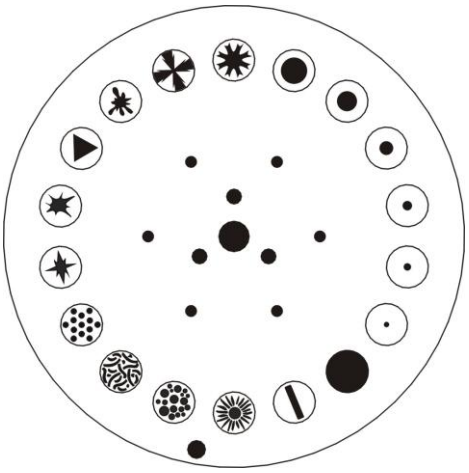

DANGER!
Install/change the gobo-wheel with the device switched off only.

5.2 Lamp

Philips MSD Platinum 5R (8000K)

- Because of its high internal pressure, there might be a risk that the Discharge lamp would explode during operation. The lamp emits intense UV radiation which is harmful to the eyes and skin. The high luminance of the arc can cause severe damage to the retina if you take a close look at the lamp.
- To protect the lamp, always turn off the lamp first (via control panel or DMX controller) and let the unit run at least five minutes to cool down before switching off the mains supply. Never handle the lamp or luminary when it is hot.
- Do not touch the bulb with bare hands. If this happens, clean the lamp with denatured alcohol and wipe it with a lint free cloth before installation.
- The lamp generates UV radiation. Never operate the lamp without appropriate shielding.
- When lighting up, the lamp operates at high pressure and there is a slight risk of arc tube rupture. The risk increases with age, temperature and improper handling of the lamp. Do not use the lamp longer than its lifespan.
- Make sure the lamp is located in the center of the reflector for the best projection.

5.3 Change the Lamp

Fig1

Fig2

1. Follow the Fig.1 and Fig.2: Loosen the four screws and open the cover

Fig3

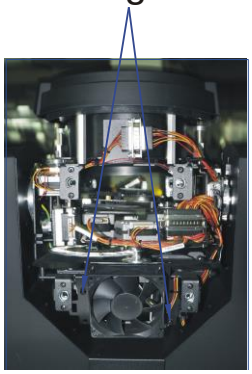

Fig4

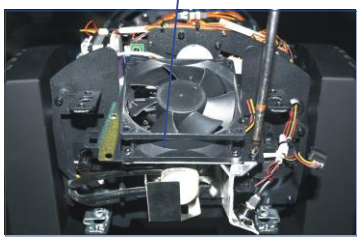

2. Follow the Fig.3 and Fig.4: Loosen the two screws and apart the entire assembly

Fig5

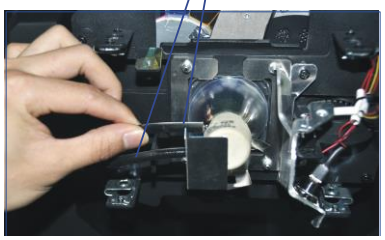

Fig6

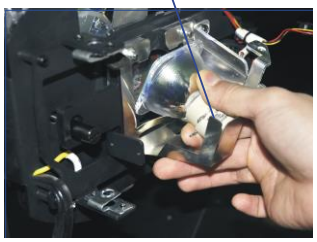

3. Follow the Fig.5 and Fig.6: Unplug all the connect wires over the lamp and wear Anti-static gloves to take on the lamp

4. Change a new lamp

6. How To Set The Unit

6.1 Power On Display

Every time you turn on the unit, it will run built-in program to reset all motors to their home position, the display will show as fig.4, you may hear some noises for about 20 seconds. It will show warning sign if it goes wrong during resetting and you can press the MENU button to view the error information. After that the unit will be ready to receive DMX signal and the display will show as fig.5.

Fig.4

Fig.5

Explanation of fig.5:

Base 40°C	Show temperature of base CPU is 40°C
001	Show start address
Md.1 19Ch.	Show channel mode is mode 1 (19 channels mode)

6.2 Main Function

Turn on the unit, press **MENU** button into menu mode, press **UP** and **DOWN** button until the required function is shown on the monitor. Select the function by **ENTER** button. Use **UP** and **DOWN** button to choose the submenu, press the **ENTER** button to store and automatically return to the last menu. Press **MENU** button or let the unit idle one minute to exit menu mode.

In the event of disconnecting with mains power, press **UP** button for one minute to enter into menu mode. Press MENU button or let the unit idle one minute to exit.

The main functions are shown below (the grayed boxes are preset settings) :

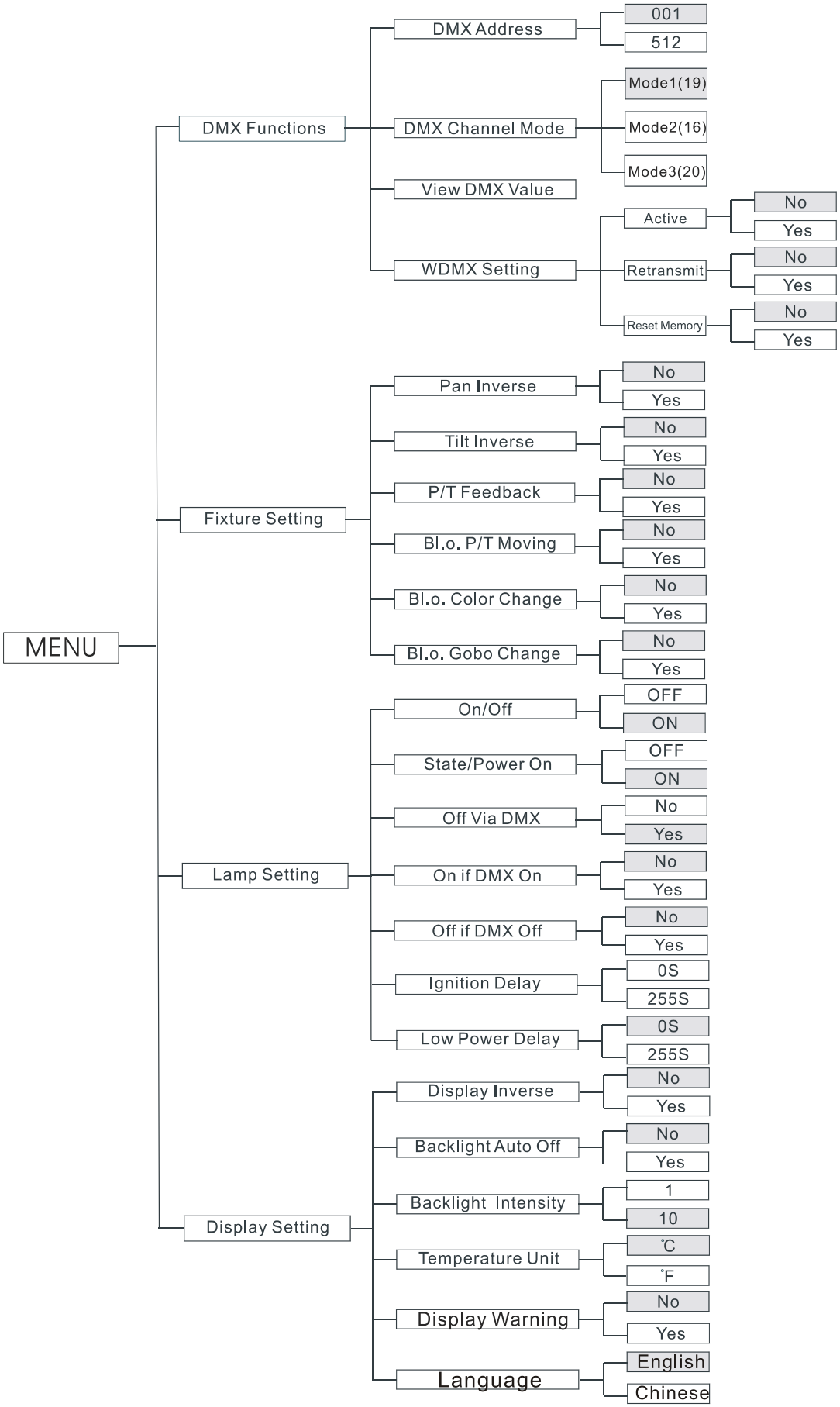
MENU
DMX Functions
DMX Address
001
512
DMX Channel Mode
Mode1(19)
Mode2(16)
Mode3(20)
View DMX Value
WDMX Setting
Active
No
Yes
Retransmit
No
Yes
Reset Memory
No
Yes
Fixture Setting
Pan Inverse
No
Yes
Tilt Inverse
No
Yes
P/T Feedback
No
Yes
Bl.o. P/T Moving
No
Yes
Bl.o. Color Change
No
Yes
Bl.o. Gobo Change
No
Yes
Lamp Setting
On/Off
OFF
ON
State/Power On
OFF
ON
Off Via DMX
No
Yes
On if DMX On
No
Yes
Off if DMX Off
No
Yes
Ignition Delay
0S
255S
Low Power Delay
0S
255S
Display Setting
Display Inverse
No
Yes
Backlight Auto Off
No
Yes
Backlight Intensity
1
10
Temperature Unit
℃
℉
Display Warning
No
Yes
Language
English
Chinese

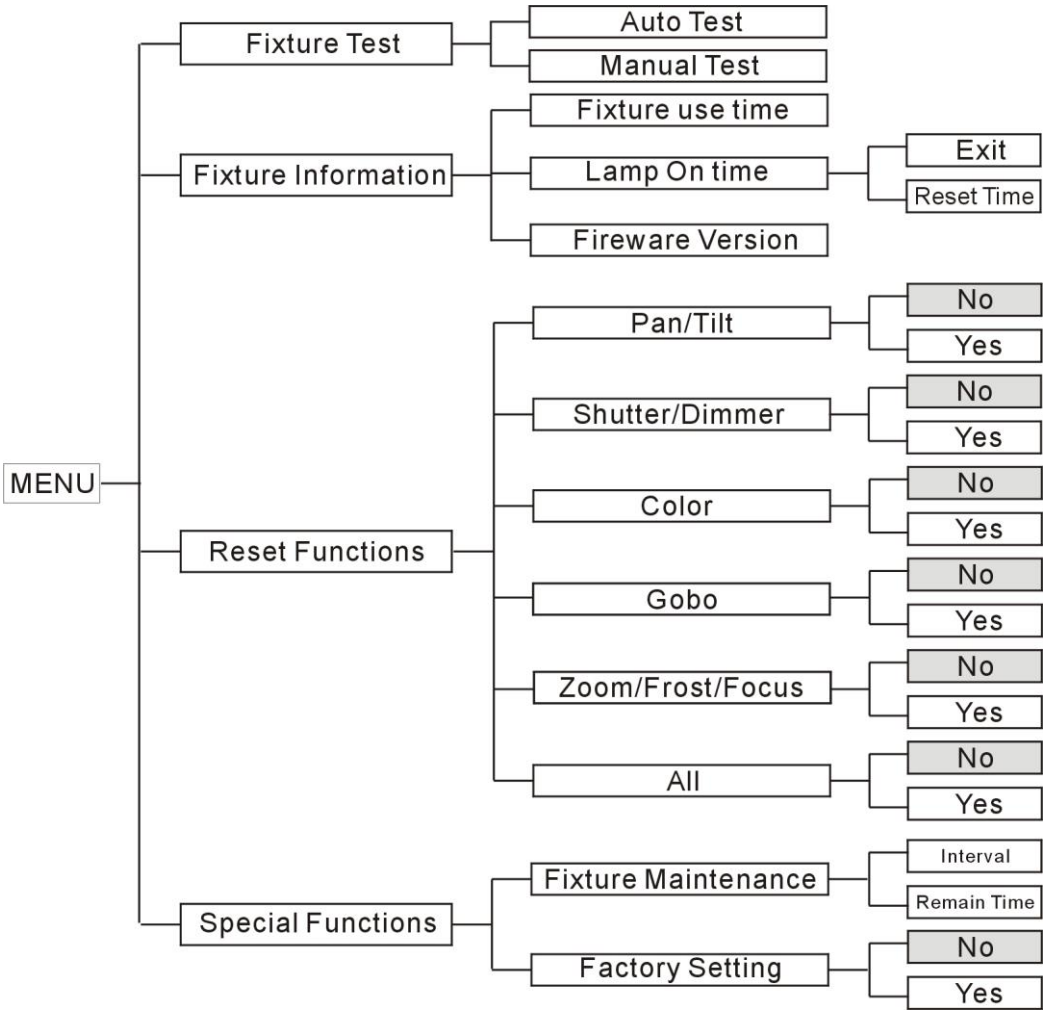

DMX Functions

Enter menu mode, select ***DMX Functions***, press ENTER button to confirm, use UP and DOWN button to select ***DMX Address***, ***DMX Channel Mode*** or ***View DMX Value***

DMX Address—*DMX512 address setting*

Select **DMX Address**, press ENTER button to confirm, the present address will blink on the display, use UP and DOWN button to adjust the address from **1** to **512**, press ENTER button to store. Press MENU button back to the last menu or let the unit idle one minute to exit menu mode.

DMX Channel Mode—*channel mode*

Select **DMX Channel Mode**, press ENTER button to confirm, present channel mode will blink on the display, use UP and DOWN button to select **Mode1 (19 channels**

mode) or **Mode 2 (16channels mode)** or **Mode 3 (20 channels mode)**, press ENTER button to store. Press MENU button back to the last menu or let the unit idle one minute to exit menu mode.

View DMX Value

Select **View DMX Value**, press ENTER button to confirm. Channel function and its value will show on the display, use UP and DOWN button to view other DMX value. Press MENU button back to the last menu or let the unit idle one minute to exit menu mode.

WDMX Setting—wireless control setting

(For the unit with wireless receiver built-in only)

Select **WDMX Setting**, press ENTER button to confirm. Use UP and DOWN button to select **Active**, **Retransmit** or **Reset Memory**, press ENTER button to store. Press MENU button back to the last menu or let the unit idle one minute to exit menu mode.

Active

Select **Active,** press ENTER button to confirm, use UP and DOWN button to select **Yes** (wireless control available) or **No** (wireless control unavailable), press ENTER button to store. Press MENU button back to the last menu or let the unit idle one minute to exit menu mode.

(Set wireless control to be available, the power indicate LED will strobe)

Retransmit

Select **Retransmit,** press ENTER button to confirm, use UP and DOWN button to select **Yes** or **No**, press ENTER button to store. Press MENU button back to the last menu or let the unit idle one minute to exit menu mode.

Reset Memory

Select **Reset Memory,** press ENTER button to confirm, use UP and DOWN button to select **Yes** (refuse wireless signal) or **No**, press ENTER button to store. Press MENU button back to the last menu or let the unit idle one minute to exit menu mode.

Fixture Setting

Enter menu mode, select ***Fixture Setting***, press ENTER button to confirm, use UP and

DOWN button to select ***Pan Inverse, Tile Inverse, BL.O. P/T Moving, BL.O. Color Change*** or ***BL.O. Gobo Change.***

Pan Inverse

Select **Pan Inverse**, press ENTER button to confirm, present mode will blink on the display, use UP and DOWN button to select **No** (normal) or **Yes** (pan inverse), press ENTER button to store. Press MENU button back to the last menu or let the unit idle one minute to exit menu mode.

Tilt Inverse

Select **Tilt Inverse**, press ENTER button to confirm, present mode will blink on the display, use UP and DOWN button to select **No** (normal) or **Yes** (tilt inverse), press ENTER button to store. Press MENU button back to the last menu or let the unit idle one minute to exit menu mode.

P/T Feedback *— pan/tilt Feedback*

Select **P/T Feedback**, press ENTER button to confirm, present mode will blink on the display, press UP/DOWN button to select **No** (Pan or tilt's position will not feedback while out of step.) or **Yes** (Feedback while pan/tilt out of step.), press ENTER button to store. Press MENU button back to the last menu or let the unit idle one minute to exit menu mode.

BL.O. P/T Moving*—Blackout while pan/tilt moving*

Select **BL.O. P/T Moving**, Press ENTER button to confirm, present mode will blink on the display, use UP and DOWN button to select **No** (normal while pan/tilt moving) or **Yes** (blackout while pan/tilt moving), press ENTER button to store. Press MENU button back to the last menu or let the unit idle one minute to exit menu mode.

BL.O. Color Change*—Blackout while change color*

Select **BL.O. Color Change**, press ENTER button to confirm, present mode will blink on the display, use UP and DOWN button to select **No** (normal while change color) or **Yes** (blackout while change color), press ENTER button to store. Press MENU button

back to the last menu or let the unit idle one minute to exit menu mode.

BL.O. Gobo Change—*Blackout while change gobo*

Select **BL.O. Gobo Change**, press ENTER button to confirm, present mode will blink on the display, use UP and DOWN button to select **No** (normal while changing gobo) or **Yes** (blackout while changing gobo), press ENTER button to store. Press MENU button back to the last menu or let the unit idle one minute to exit menu mode.

Lamp Setting

Attention: The lamp will not be on unit detected temperature is lower than 45℃.

Enter menu mode, select ***Fixture Setting***, press ENTER button to confirm, use UP and DOWN button to select ***On/Off, State/Power on, Off Via DMX, On if DMX on, Off if DMX off, Cooling Mode, Ignition Delay*** or ***Low Power Delay.***.

On/Off—*Turn on/off the lamp*

Select **On/Off**, press ENTER button to confirm, present mode will blink on the display, use UP and DOWN button to select **On** (lamp on) or **Off** (lamp off), press ENTER button to store. Press MENU button back to the last menu or let the unit idle one minute to exit menu mode.

State/Power On—*Lamp state while power on*

Select **State/Power On**, press ENTER button to confirm, present mode will blink on the display, use UP and DOWN button to select **On** (Lamp on while power on) or **Off** (Lamp off while power on), press ENTER button to store. Press MENU button back to the last menu or let the unit idle one minute to exit menu mode.

Off Via DMX—*Turn off the unit via DMX controller*

Select **Off Via DMX**, press ENTER button to confirm, present mode will blink on the display, use UP and DOWN button to select **Yes** (turn off the unit via DMX controller available) or **No** (turn off the unit via DMX controller impracticable), press ENTER button to store. Press MENU button back to the last menu or let the unit idle one minute

to exit menu mode.

(When you operate the unit via DMX controller, set the value of channel "special function" to "lamp off", waiting for 5 seconds, then the lamp will be off if you choose "yes" mode).

***On If DMX On*—** Lamp turns on when DMX signal is detected

Select **On If DMX On**, press ENTER button to confirm, present mode will blink on the display, use UP and DOWN button to select **Yes** (Lamp turns on when DMX signal is detected) or **No** (keep the present state), press ENTER button to store. Press MENU button back to the last menu or let the unit idle one minute to exit menu mode *(If the lamp is off via DMX signal, you can reconnect the DMX controller to make the lamp on).*

***Off If DMX Off*—** Lamp turns off when DMX signal is cut off

Select **Off If DMX Off**, press ENTER button to confirm, present mode will blink on the display, use UP and DOWN button to select **Yes** (Lamp turns off when DMX signal is cut off), press ENTER button to store. Press MENU button back to the last menu or let the unit idle one minute to exit menu mode.

Ignition Delay—*Delay time between power on and lamp on*

Select **Ignition Delay**, press ENTER button to confirm, present mode will blink on the display, use UP and DOWN button to adjust the delay time from 0S to 255S, press ENTER button to store. Press MENU button back to the last menu or let the unit idle one minute to exit menu mode.

Low Power Delay—*Delay time between reduce lamp power and shutter off the unit*

Select **Low Power Delay**, press ENTER button to confirm, present mode will blink on the display, use UP and DOWN button to adjust the delay time from 0S to 255S, press ENTER button to store. Press MENU button back to the last menu or let the unit idle one minute to exit menu mode.

(If you set the low power delay time to 3S, the lamp will run in half power 3 seconds after the unit shutter off)

Display Setting

Enter menu mode, select ***Display Setting***, press ENTER button to confirm, use UP and DOWN button to select ***Display Inverse***, ***Backlight Auto Off***, ***Backlight Intensity***, ***Temperature unit***, ***Display Warning*** or ***Language.***

Display Inverse

Select **Display Inverse**, press ENTER button to confirm, present mode will blink on the display, use UP and DOWN button to select **No** (normal display) or **Yes** (inverse display), press ENTER button to store. Press MENU button back to the last menu or let the unit idle one minute to exit menu mode.

Backlight Auto Off

Select **Backlight Auto Off**, press ENTER button to confirm, present mode will blink on the display, use UP and DOWN button to select **No** (display always on) or **Yes** (display goes off one minute after exiting menu mode), press ENTER button to store. Press MENU button back to the last menu or let the unit idle one minute to exit menu mode.

Backlight Intensity

Select **Backlight Intensity**, press ENTER button to confirm, present mode will blink on the display, use UP and DOWN button to adjust backlight intensity from **1** (dark) to **10** (bright), press ENTER button to store. Press MENU button back to the last menu or let the unit idle one minute to exit menu mode.

Temperature Unit

Select **Temperature Unit**, press ENTER button to confirm, present mode will blink on the display, use UP and DOWN button to select **℃** or **℉**, press ENTER button to store. Press MENU button back to the last menu or let the unit idle one minute to exit menu mode.

Display Warning

Select **Display Warning**, press ENTER button to confirm, present mode will blink on the display, use UP and DOWN button to select **No** (not show the error warning information) or **Yes** (display will show the error warning when the unit went wrong), press ENTER button to store. Press MENU button back to the last menu or let the unit idle one minute to exit menu mode.

Language

Select **Language**, press ENTER button to confirm, present mode will blink on the display, use UP and DOWN button to select **English** or **Chinese**, press ENTER button to store. Press MENU button back to the last menu or let the unit idle one minute to exit menu mode.

Fixture Test

Enter menu mode, select ***Fixture Test***, press ENTER button to confirm, use UP and DOWN button to select ***Auto Test*** or ***Manual Test***

Auto Test

Select **Auto Test**, press ENTER button to confirm, the unit will run built-in programs to automatically test pan, tilt, color, gobo, gobo rotation, shutter, dimmer, prism, prism rotation, frost, focus, and lamp on/off. . Press MENU button back to the last menu or exit menu mode after auto test.

Manual Test

Select **Manual Test**, press ENTER button to confirm, the present channel will show on the display, use Up and DOWN button to select channel, press ENTER button to confirm, then use UP and DOWN button to adjust the value, press ENTER button to store, the fixture will run as the channel value indicates. Press MENU button back to the last menu or exit menu mode let the unit idle one minute.

(All channels value will become 0 after exiting Manual Test menu)

Fixture Information

Enter menu mode, select ***Fixture Information***, press ENTER button to confirm, use UP and DOWN button to select ***Fixture Use Time, Lamp On Time*** or ***Firmware Version.***

Fixture Use Time

Select **Fixture Use Time**, press ENTER button to confirm, fixture use time will show on the display, press MENU button to exit.

Lamp On Time

Select **Lamp On Time**, press ENTER button to confirm, lamp on time will show on the display, press ENTER button to confirm, use UP and DOWN button to select **Exit** or **Reset Time**, press ENTER button to confirm. Press MENU button back to the last menu or exit menu mode let the unit idle one minute.

Firmware Version

Select **Firmware Version**, press ENTER button to confirm, firmware version will show on the display, press MENU button back to exit.

Reset Functions

Enter menu mode, select ***Reset Function***, press ENTER button to confirm, use UP and DOWN button to select ***Pan/Tilt, Shutter/Prism, Color, Gobo, Zoom/ Focus/ Frost*** or ***All.***

Pan/Tilt*—Reset Pan/Tilt*

Select **Pan/Tilt**, press ENTER button to confirm, use UP and DOWN button to select **Yes** (the unit will run built-in program to reset pan and tilt to their home positions) or **No**, press ENTER button to store. Press MENU button back to the last menu or let the unit idle one minute to exit menu mode.

Shutter/Prism*—Reset Shutter/ Prism*

Select **Shutter//Prism**, press ENTER button to confirm, use UP and DOWN button to select **Yes** (the unit will run built-in program to reset shutter and ***Prism*** to their home positions) or **No**, press ENTER button to store. Press MENU button to exit.

Color—*Reset Color*

Select **Color**, press ENTER button to confirm, use UP and DOWN button to select **Yes** (the unit will run built-in program to reset color to their home positions) or **No**, press ENTER button to store. Press MENU button to exit.

Gobo—*Reset GOBO*

Select **Gobo**, press ENTER button to confirm, use UP and DOWN button to select **Yes** (the unit will run built-in program to reset GOBO wheel to their home positions) or **No**, press ENTER button to store. Press MENU button to exit.

Zoom /Frost/Focus—*Reset Zoom /Frost/Focus*

Select **Zoom /Frost/Focus,** press ENTER button to confirm, use UP and DOWN button to select **Yes** (the unit will run built-in program to reset zoom, frost and frost to their home positions) or **No**, and press ENTER button to store. Press MENU button to exit.

All—*Reset All*

Select **All,** press ENTER button to confirm, use UP and DOWN button to select **Yes** (the unit will run built-in program to reset all motors to their home positions) or **No**, press ENTER button to store. Press MENU button to exit.

Special Functions

Enter menu mode, select ***Special Functions***, press ENTER button to confirm, use UP and DOWN button to select ***Fixture Maintenance*** or ***Factory Setting.***

Fixture Maintenance

Select **Fixture Maintenance**, press ENTER button to confirm, use UP and DOWN button to select **Interval** or **Remain Time**.

Interval

Select **Interval,** press ENTER button to confirm, the interval time will show on the display. Press MENU button to exit.

Remain Time

Select **Remain Time,** press ENTER button to confirm, the remaining time will show on the display, press ENTER button to confirm, use UP and DOWN button to select **Exit** or **Reset time**, press MENU button to exit.

Factory Setting

Select **Factory Setting**, press ENTER button to confirm, the fixture will reset to factory settings and exit menu mode.

6.3. Home Position Adjustment

Press **MENU** button into menu mode, then press ENTER button for about 3 seconds into offset mode to adjust the home position. Select the function by **ENTER** button. Use **UP** and **DOWN** button to choose the submenu, press the **ENTER** button to store and automatically return to the last menu. Press MENU button to exit.

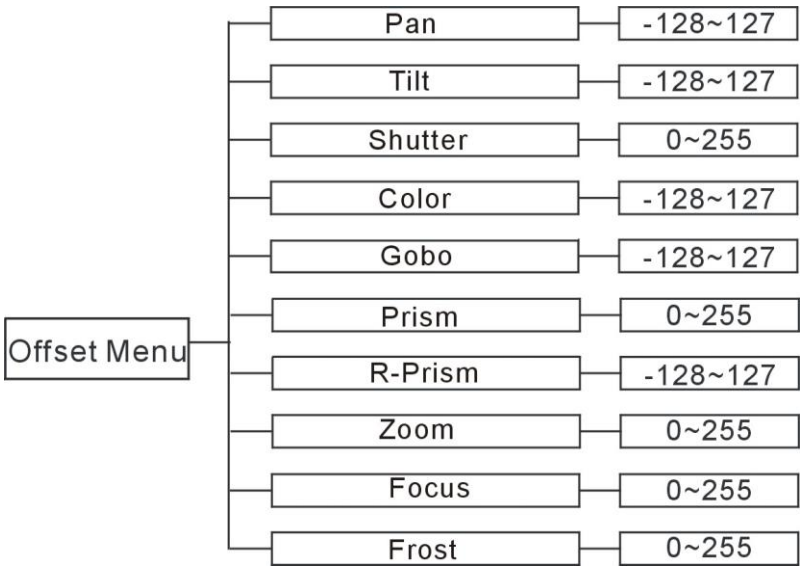

Pan*—pan home position adjust*

Enter offset mode, Select **Pan**, press ENTER button to confirm, the present position will

blink on the display, use UP and DOWN button to offset the value from -128 to 127, press ENTER button to store. Press MENU button to exit.

Tilt—*Tilt home position adjust*

Enter offset mode, Select **Tilt**, press ENTER button to confirm, the present position will blink on the display, use UP and DOWN button to offset the value from -128 to 127, press ENTER button to store. Press MENU button to exit.

Shutter—*Shutter home position adjust*

Enter offset mode, Select **Shutter**, press ENTER button to confirm, the present position will blink on the display, use UP and DOWN button to offset the value from 0 to 255, press ENTER button to store. Press MENU button to exit.

Color—*Color home position adjust*

Enter offset mode, Select **Color**, press ENTER button to confirm, the present position will blink on the display, use UP and DOWN button to offset the value from -128 to 127, press ENTER button to store. Press MENU button to exit.

Gobo—*Gobo home position adjust*

Enter offset mode, Select **Gobo**, press ENTER button to confirm, the present position will blink on the display, use UP and DOWN button to offset the value from -128 to 127, press ENTER button to store. Press MENU button to exit.

Prism—*Prism home position adjust*

Enter offset mode, Select **Prism**, press ENTER button to confirm, the present position will blink on the display, use UP and DOWN button to offset the value from 0 to 255, press ENTER button to store. Press MENU button to exit.

R-Prism—*Prism rotation home position adjust*

Enter offset mode, Select **R-Prism**, press ENTER button to confirm, the present position will blink on the display, use UP and DOWN button to offset the value from -128 to 127, press ENTER button to store. Press MENU button to exit.

Zoom—*Zoom home position adjust*

Enter offset mode, Select **Zoom**, press ENTER button to confirm, the present position will blink on the display, use UP and DOWN button to offset the value from 0 to 255, press ENTER button to store. Press MENU button to exit.

Focus—*Focus home position adjust*

Enter offset mode, Select **Focus**, press ENTER button to confirm, the present position will blink on the display, use UP and DOWN button to offset the value from 0 to 255, press ENTER button to store. Press MENU button to exit.

Frost—*Frost home position adjust*

Enter offset mode, Select **Frost**, press ENTER button to confirm, the present position will blink on the display, use UP and DOWN button to offset the value from 0 to 255, press ENTER button to store. Press MENU button to exit.

6.4. Error Information

Lamp Startup Fail

It appears when there is no lamp or some wires are damaged.

Temperature Sense Error

It appears when temperature check board is damaged.

Lamp Too Hot Power Off

It appears when temperature is detected higher than 110℃. Check if the unit is properly ventilated, or fans or temperature check board may is damaged.

Lamp Too Hot Low Power

It appears when temperature is detected higher than 105℃. the unit will run on a low power level.

Maintenance Fixture

It appears when the maintenance remaining time becomes 0S, please enter menu mode and reset the time.

Lamp On Over 700 Hour

It appears when the lamp has been on over 700 hours, please turn off the lamp.

Memory Initial Fail

It appears when the memory IC is damaged.

CPU-B Error, CPU-C Error, CPU-D Error

They appear when board P.C or some wires are damaged.

Pan Reset Error, Pan Encode Error, Tilt Reset Error, Tilt Encode Error, Shutter Reset Fail, Dimmer Reset Fail, Color Reset Fail, , Gobo Reset Fail, , , and Frost Reset Fail

They may appear when turning on or resetting the unit, for some parts such as board P.C are damaged. Please contact the qualified maintenance.

7. Control By Universal DMX Controller

7.1 Connection

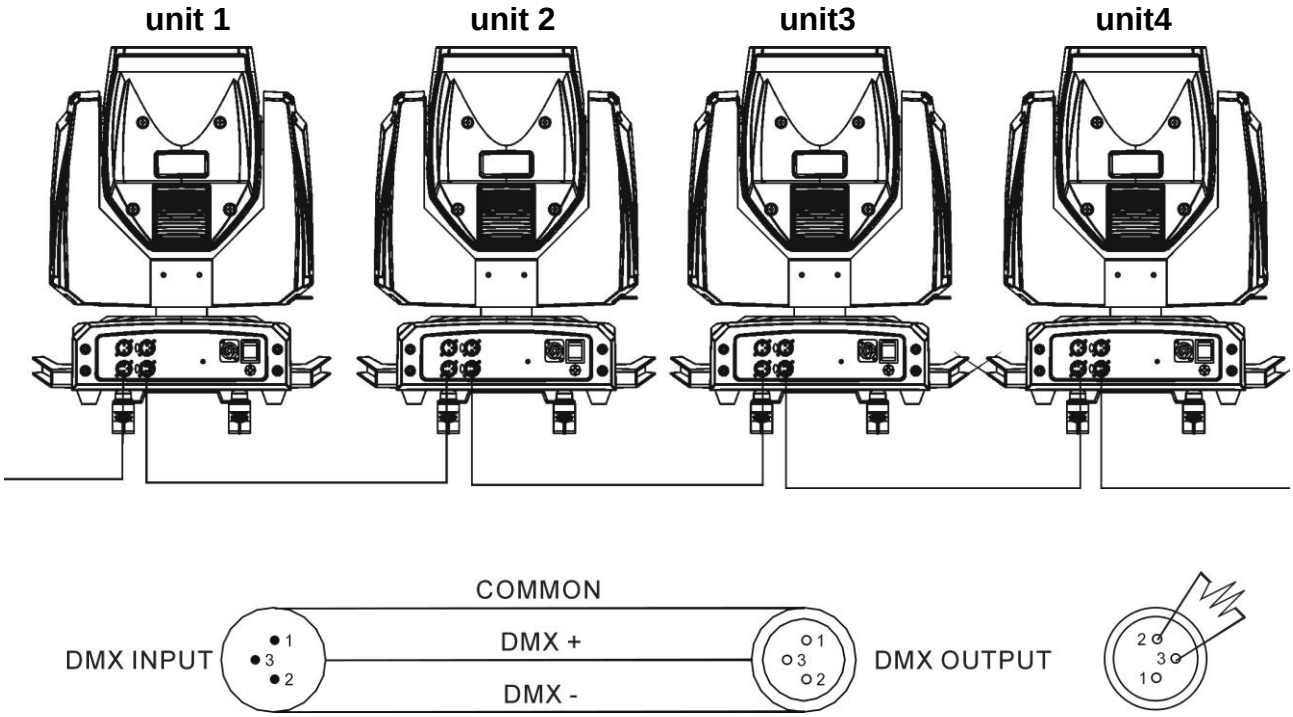

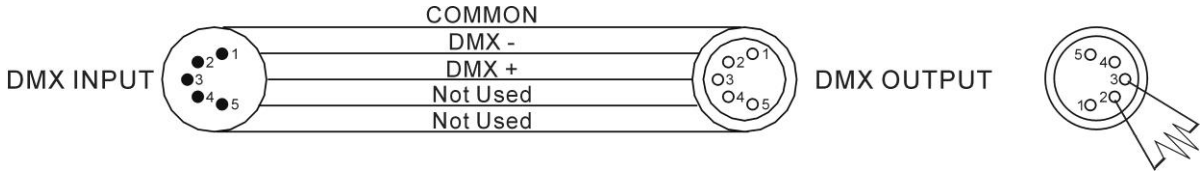

1. At last unit, the DMX cable has to be terminated with a terminator. Solder a 120-ohm 1/4W resistor between pin 2(DMX-) and pin 3(DMX+) into a 3-pin XLR-plug and plug it in the DMX-output of the last unit.

2. Connect the unit together in a “daisy chain” by XLR plug cable from the output of the unit to the input of the next unit. The cable cannot be branched or split to a “Y” cable. DMX 512 is a very high-speed signal. Inadequate or damaged cables, soldered joints or corroded connectors can easily distort the signal and shut down the system.
3. The DMX output and input connectors are pass-through to maintain the DMX circuit, when one of the units’ power is disconnected.
4. Each lighting unit needs to have a DMX address to receive the data by the controller. The address number is between 0-511 (usually 0 & 1 are equal to 1).
5. The end of the DMX 512 system should be terminated to reduce signal errors.
6. 3 pin XLR connectors are more popular than 5 pins XLR.

   3 pin XLR: Pin 1: GND, Pin 2: Negative signal (-), Pin 3: Positive signal (+)

   5 pin XLR: Pin 1: GND, Pin 2: Negative signal (-), Pin 3: Positive signal (+), Pin4, Pin5 not used.

7.2 Channel Mode Setting

Enter menu mode, select ***DMX Functions***, press ENTER button to confirm, use UP and DOWN button to select **DMX Channel Mode**, press ENTER button to confirm, present channel mode will blink on the display, use UP and DOWN button to select **Mode1 (19 channels mode)** or **Mode 2 (16 channels mode)** or **Mode 3 (20 channels mode)**, press ENTER button to store. Press MENU button back to the last menu or let the unit idle one minute to exit menu mode.

7.3 Address Setting

If you use a universal DMX controller to control the units, you have to set DMX address from 1 to 512 so that the units can receive DMX signal.

Press MENU button to enter menu mode, select ***DMX Functions***, press ENTER button to confirm, use UP and DOWN button to select ***DMX Address***, press ENTER button to confirm, the present address will blink on the display, use UP and DOWN button to adjust the address from 0 to 512, press ENTER button to store. Press MENU button back to the last menu or let the unit idle one minute to exit menu mode.

Please refer to the following diagram to address your DMX512 channel for the first 4 units.

Channel mode	Unit 1 Address	Unit 2 Address	Unit 3 Address	Unit 4 Address
19 channels	1	20	39	58
16 channels	1	17	33	49
20 channels	1	21	41	61

7.4 DMX 512 Configuration

Please refer to below configurations to control the fixtures

Attention:

1. The unit will maintain the last condition until reset if you cut-off the DMX signal.
2. For the channel Function, keep the value for about 5 seconds, then the corresponding function will take into effect.

19 Channels mode1：

19Channels(Mode1)

Ch1	Ch2	Ch3	Ch4	Ch5
Pan	Pan Fine	Tilt	Tilt Fine	Pan/Tilt Speed
255 540° / 0 0°	255 / 0	255 270° / 0 0°	255 / 0	255 Slow / Fast 0

Ch6	Ch7	Ch8
Function	P/T Macro	P/T Macro speed
240-255 No Function 230-239 Lamp Off 220-229 Disable blackout while pan/tilt gobo color change 210-219 Enable blackout while pan/tilt gobo color change 200-209 Reset all 190-199 Frost/Focus/zoom reset 180-189 No function 170-179 Shutter/prism/R-Prism rest 160-169 Gobo reset 150-159 Color reset 140-149 Pan/tilt reset 130-139 Lamp on 120-129 Disable blackout while gobo change 110-119 Enable blackout while gogo change 100-109 Disable blackout while color change 90-99 Enable blackout while color change 80-89 Disable blackout while pan/tilt move 70-79 Enable blackout while pan/tilt move 60-69 Pan/tilt normal mode 50-59 Pan/tilt fast mode 40-49 Dimmer linear mode 30-39 Dimmer conventional mode 0-29 No Function	248-255 Macro31 240-247 Macro30 232-239 Macro29 224-231 Macro 28 216-223 Macro27 208-215 Macro26 200-207 Macro25 192-199 Macro24 184-191 Macro 23 176-183 Macro22 168-175 Macro21 160-167 Macro20 152-159 Macro19 144-151 Macro 18 136-143 Macro17 128-135 Macro16 120-127 Macro15 112-119 Macro14 104-111 Macro 13 096-103 Macro12 088-095 Macro11 080-087 Macro10 072-079 Macro9 064-071 Macro 8 056-063 Macro7 048-055 Macro6 040-047 Macro5 032-039 Macro4 024-031 Macro 3 016-023 Macro2 008-015 Macro1 000-007 Off	255 Slow / Fast 0

19Channels(Mode 1)			
Ch9	Ch10	Ch11	Ch12
Color	Gobo	Prism	Prism Rotation
255 Rotation Fast 194 Rotation Slow 190-193 Stop 189 Rotation Slow 128 Rotation Fast 064-127 Index 061-063 Color14+White 059-060 Color14 057-058 Color13+Color14 055-056 Color13 053-054 Color12+Color13 051-052 Color12 049-050 Color11+Color12 047-048 Color11 045-046 Color10+Color11 043-044 Color10 040-042 Color9+Color10 038-039 Color9 036-037 Color8+Color9 034-035 Color8 032-033 Color7+Color8 030-031 Color7 028-029 Color6+Color7 026-027 Color6 024-025 Color5+Color6 022-023 Color5 019-021 Color4+Color5 017-018 Color4 015-016 Color3+Color4 013-014 Color3 011-012 Color2+Color3 009-010 Color2 007-008 Color1+Color2 005-006 Color1 003-004 White+Color1 000-002 White	255 Fast Rotation 194 Slow Rotation 190-193 Stop 189 Slow Rotation 128 Fast Rotation 124-127 Gobo17 Shaking 120-123 Gobo16 Shaking 116-119 Gobo15 Shaking 112-115 Gobo14 Shaking 108-111 Gobo13 Shaking 104-107 Gobo12 Shaking 100-103 Gobo11Shaking 96-99 Gobo10 Shaking 92-95 Gobo9 Shaking 88-91 Gobo8 Shaking 84-87 Gobo7 Shaking 80-83 Gobo6 Shaking 76-79 Gobo5 Shaking 72-75 Gobo4 Shaking 68-71 Gobo3 Shaking 64-67 Gobo2 Shaking 60-63 Gobo1 Shaking 56-59 White Shaking 52-55 Gobo17 49-51Gobo16 46-48 Gobo15 43-45 Gobo14 40-42 Gobo13 37-39 Gobo12 34-36 Gobo11 31-33 Gobo10 28-30 Gobo9 25-27 Gobo8 22-24 Gobo7 19-21 Gobo6 16-18 Gobo5 13-15 Gobo4 10-12 Gobo3 7-9 Gobo2 4-6 Gobo1 0-3 White	251-255 Prism rotation effects 28 247-250 Prism rotation effects 27 242-246 Prism rotation effects 26 237-241 Prism rotation effects 25 233-236 Prism rotation effects 24 228-232 Prism rotation effects 23 224-227 Prism rotation effects 22 219-223 Prism rotation effects 21 215-218 Prism rotation effects 20 210-214 Prism rotation effects 19 206-209 Prism rotation effects 18 201-205 Prism rotation effects 17 197-200 Prism rotation effects 16 192-196 Prism rotation effects 15 188-191 Prism rotation effects 14 183-187 Prism rotation effects 13 178-182 Prism rotation effects 12 174-177 Prism rotation effects 11 169-173 Prism rotation effects 10 165-168 Prism rotation effects 9 160-164 Prism rotation effects 8 156-159 Prism rotation effects 7 151-155 Prism rotation effects 6 147-150 Prism rotation effects 5 142-146 Prism rotation effects 4 138-141 Prism rotation effects 3 133-137Prism rotation effects 2 128-132 Prism rotation effects 1 8-127 Prism Effect 0-7 No function	255 Fast Rotation 194 Slow Rotation 190-193 Stop 189Slow Rotation 128 Fast Rotation 0-127 Index Rotation

19 Channel mode(1)						
Ch13	Ch14	Ch15	Ch16	Ch17	Ch18	Ch19
R-Prism Fine	Prism Movement effect	Focus	Frost	Shutter	Dimmer	Dimmer Fine
255 0	255 0	255 0	255 100% 0 0%	248-255 Open 240-247 Strobe Random 204-239 Pulse Open and Close 168-203 Fast Open Slow Close 132-167 Fast Close Slow Open 131 Fast Shutter 16 Slow Shutter 8-15 Open 0-7 Off	255 100% 0 0%	255 100% 0 0%

16 Channels mode 2:

16Channels(Mode 2)					
Ch1	Ch2	Ch3	Ch4	Ch5	Ch6
Color Wheel	Strobe	Dimmer	Gobo	Prism	Prism Rotation
255 Rotation Fast 128 Rotation Slow 124-127 Color14+White 120-123 Color14 116-119 Color13+Color14 111-115 Color13 107-110 Color12+Color13 103-106 Color12 099-102 Color11+Color12 094-098 Color11 090-093 Color10+Color11 086-089 Color10 082-085 Color9+Color10 077-081 Color9 073-076 Color8+Color9 069-072 Color8 064-068 Color7+Color8 060-063 Color7 056-059 Color6+Color7 052-055 Color6 047-051 Color5+Color6 043-046 Color5 039-042 Color4+Color5 035-038 Color4 030-034 Color3+Color4 026-029 Color3 022-025 Color2+Color3 018-021 Color2 013-017 Color1+Color2 009-012 Color1 005-008 White+Color1 000-004 White	252-255 Open 239-251 Random Fast Strobe 226-238 Random Medium Strobe 213-225 Random Slow Strobe 208-212 Open 207 Fast Pulsation 108 Slow Pulsation 104-107 Open 103 Fast Strobe 4 Slow Strobe 0-3 Closed	255 100% 0 0%	250-255 Gobo16 Shaking 244-249 Gobo15Shaking 237-243 Gobo14 Shaking 231-236 Gobo13Shaking 224-230 Gobo12 Shaking 218-223 Gobo11 Shaking 212-217 Gobo10 Shaking 205-211 Gobo9 Shaking 199-204 Gobo8 Shaking 192-198 Gobo7 Shaking 186-191 Gobo6 Shaking 180-185 Gobo5 Shaking 173-179 Gobo4 Shaking 167-172 Gobo3 Shaking 160-166 Gobo2 Shaking 159 Fast Rotation 118 Slow Rotation 114-117 Stop 113 Slow Rotation 72 Fast Rotation 68-71 Gobo17 64-67Gobo16 60-63 Gobo15 56-59 Gobo14 52-55 Gobo13 48-51 Gobo12 44-47 Gobo11 40-43 Gobo10 36-39 Gobo9 32-35 Gobo8 28-31 Gobo7 24-27 Gobo6 20-23 Gobo5 16-19 Gobo4 12-15 Gobo3 8-11 Gobo2 4-7 Gobo1 0-3 White	128-255 Prism inserted 0-127 Prism Excluded	255 Fast Rotation 193 Slow Rotation 191-192 Stop 190Slow Rotation 128 Fast Rotation 0-127 Index Rotation

16Channels(Mode 2)

Ch7	Ch8	Ch9	Ch10	Ch11	Ch12	Ch13
Prism movement effect	Frost	Focus	Pan	Pan Fine	Tilt	Tilt Fine
255 0	255 100% 0 0%	255 0	255 540° 0 0°	255 0	255 270° 0 0°	255 0

Ch14	Ch15	Ch16
Function	Reset	Lamp Control
63-255 No Function 51-62 Linear(Default) 38-50 Conventional — Dimmer Curve Function 25-37 Normal 12-24 Fast(Default) — Pan-Tilt Function 0-11 No Function	128-255 Complete reset complete reset is activated passing through the unused range and staying 5 seconds in complete reset levels. 77-127 Pan/Tilt reset Pan/Tilt reset is activated passing through the unused range and staying 5 seconds in Pan/Tilt reset levels. 26-76 Effects reset Effecting reset is activated passing throughthe unused range and staying 5 seconds in Effects reset levels. 0-25 No Function	101-255 Lamp on Lamp swtich-on passing through the unused range and staying 5 seconds in Lamp ON levels. 26-100 Lamp off Lamp swtich-off passing through the unused range and staying 5 seconds in Lamp OFF levels. 0-25 No Function

20 Channels mode 3:

20Channels(Mode 3)					
Ch1	Ch2	Ch3	Ch4	Ch5	Ch6
Color Wheel	Strobe	Dimmer	Gobo	Prism	Prism Rotation
255 Rotation Fast 128 Rotation Slow 124-127 Color14+White 120-123 Color14 116-119 Color13+Color14 111-115 Color13 107-110 Color12+Color13 103-106 Color12 099-102 Color11+Color12 094-098 Color11 090-093 Color10+Color11 086-089 Color10 082-085 Color9+Color10 077-081 Color9 073-076 Color8+Color9 069-072 Color8 064-068 Color7+Color8 060-063 Color7 056-059 Color6+Color7 052-055 Color6 047-051 Color5+Color6 043-046 Color5 039-042 Color4+Color5 035-038 Color4 030-034 Color3+Color4 026-029 Color3 022-025 Color2+Color3 018-021 Color2 013-017 Color1+Color2 009-012 Color1 005-008 White+Color1 000-004 White	252-255 Open 239-251 Random Fast Strobe 226-238 Random Medium Strobe 213-225 Random Slow Strobe 208-212 Open 207 Fast Pulsation 108 Slow Pulsation 104-107 Open 103 Fast Strobe 4 Slow Strobe 0-3 Closed	255 100% 0 0%	250-255 Gobo16 Shaking 244-249 Gobo15 Shaking 237-243 Gobo14 Shaking 231-236 Gobo13Shaking 224-230 Gobo12 Shaking 218-223 Gobo11 Shaking 212-217 Gobo10 Shaking 205-211 Gobo9 Shaking 199-204 Gobo8 Shaking 192-198 Gobo7 Shaking 186-191 Gobo6 Shaking 180-185 Gobo5 Shaking 173-179 Gobo4 Shaking 167-172 Gobo3 Shaking 160-166 Gobo2 Shaking 159 Fast Rotation 118 Slow Rotation 114-117 Stop 113 Slow Rotation 72 Fast Rotation 68-71 Gobo17 64-67Gobo16 60-63 Gobo15 56-59 Gobo14 52-55 Gobo13 48-51 Gobo12 44-47 Gobo11 40-43 Gobo10 36-39 Gobo9 32-35 Gobo8 28-31 Gobo7 24-27 Gobo6 20-23 Gobo5 16-19 Gobo4 12-15 Gobo3 8-11 Gobo2 4-7 Gobo1 0-3 White	128-255 Prism inserted 0-127 Prism Excluded	255 Fast Rotation 193 Slow Rotation 191-192 Stop 190Slow Rotation 128 Fast Rotation 0-127 Index Rotation

Ch7	Ch8	Ch9	Ch10	Ch11	Ch12	Ch13
Prism movement effect	Frost	Focus	Pan	Pan Fine	Tilt	Tilt Fine
255 0	255 100% 0 0%	255 0	255 540° 0 0°	255 0	255 270° 0 0°	255 0

20Channels(Mode 3)

Ch14	Ch15	Ch16
Function	Reset	Lamp Control
63-255 No Function 51-62 Linear(Default) 38-50 Conventional — Dimmer Curve Function 25-37 Normal 12-24 Fast(Default) — Pan-Tilt Function 0-11 No Function	128-255 Complete reset complete reset is activated passing through the unused range and staying 5 seconds in complete reset levels. 77-127 Pan/Tilt reset Pan/Tilt reset is activated passing through the unused range and staying 5 seconds in Pan/Tilt reset levels. 26-76 Effects reset Effecting reset is activated passing throughthe unused range and staying 5 seconds in Effects reset levels. 0-25 No Function	101-255 Lamp on Lamp swtich-on passing through the unused range and staying 5 seconds in Lamp ON levels. 26-100 Lamp off Lamp swtich-off passing through the unused range and staying 5 seconds in Lamp OFF levels. 0-25 No Function

Ch17	Ch18	Ch19	Ch20
Pan/Tilt Speed	Color Speed	Dimmer/Frost/Prism Speed	Gobo Speed
255 Slow 0 Fast	255 Fast 254 Slow 0 Fast	255 Fast 254 Slow 0 Fast	255 Fast 254 Slow 0 Fast

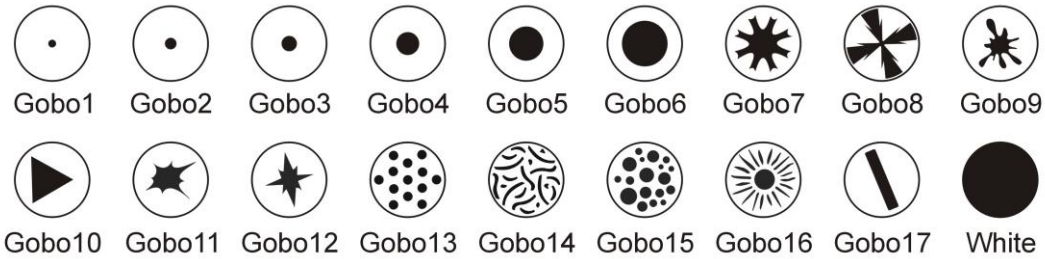

7.5 Lighting Library Download

The whole series of Xperior fixtures' personalities have been built into the most widely used consoles from Avolites, Compulite, Daslight, MA Lighting, Wholehog and Zero 88.

To apply Xperior lighting libraries into the above mentioned consoles, please refer to the following example:

Pearl 2008/2010 & Tiger

You will need a USB memory stick.

1. Download the installer from http://avolitesdownload.com/PersonalityLibrary/
2. Run it to extract the complete library of Pearl 2008/2010 and Pearl Tiger fixture personalities.
3. Choose your memory stick as the install folder from the pull down list.
4. With the memory stick now plugged into the Pearl, choose the Sync Fixture option. This option can be found on soft key E of the System->USB Stick Options menu.
5. Select the manufacturer and fixture to starting controlling.

8. Update Software

Download update file from our web site, follow the user manual of IU-01 to update the fixture via IU-01(not included).

9. Troubleshooting

Following are a few common problems that may occur during operation. Here are some suggestions for easy troubleshooting:

A. The unit does not work, no light and the fan does not work

1. Check the connect power and main fuse.
2. Measure the mains voltage on the main connector.
3. Check the power on LED to see if it can be light up or not.

B. Not responding to DMX controller

1. DMX LED should be on. If not, check DMX connectors, cables to see if they are linked properly.
2. If the DMX LED is on and no response to the channel, check the address settings and DMX polarity.
3. If you have intermittent DMX signal problems, check the pins on connectors or on PCB of the unit or the previous one.
4. Try to use another DMX controller.
5. Check to see if the DMX cables run near or run alongside high voltage cables that may cause damage or interference to DMX interface circuit.

C. One of the channels is not working well

1. The stepper motor might be damaged or the cable connected to the PCB is broken.
2. The motor's drive IC on the PCB might be out of condition.

D. The lamp is cutting out intermittently

1. The lamp is not working well. Check the mains voltage either too high or too low.
2. Internal temperature may be too high. Check if replacement of fan is needed on the head.

E. If The pan belt is broken

1. Turn off the mains power.
2. Loosen the screws (A), open the cover (B).
3. Loosen the screws (C).
4. Unplug all the connect wires over the belt.
5. Change a new belt (D), put the belt around the axis gear and motor gear.
6. Plug all the connect wires back upon the belt.
7. Tighten all the screws.

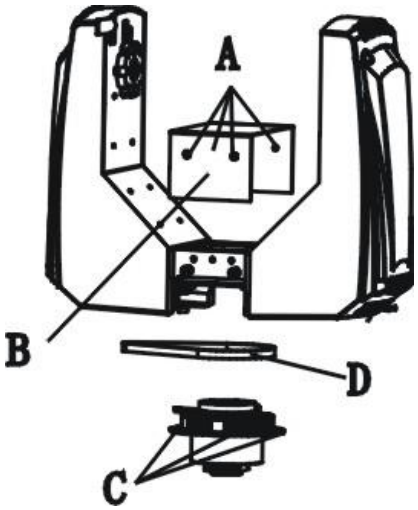

F. If The tilt belt is broken

1. Turn off the mains power.
2. Loosen all the screws (A) and open the right arm cover (B).
3. Loosen the screws (C) that fix the bridge.
4. Change a new belt (E). Please adjust the tension of the belt properly. Note: do not fix the belt too tight as it is can easily rupture.
5. Reverse the procedures from step 3 to 2.

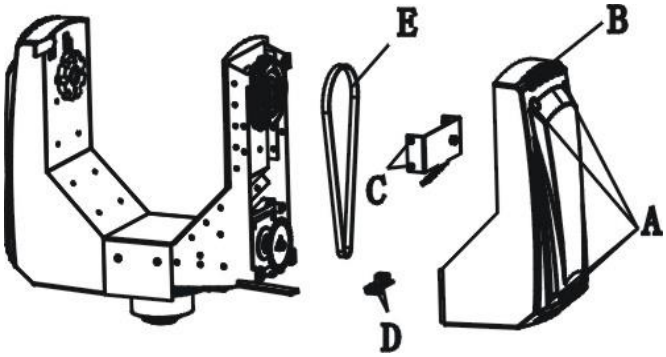

10. Maintenance and Cleaning

Maintenance:

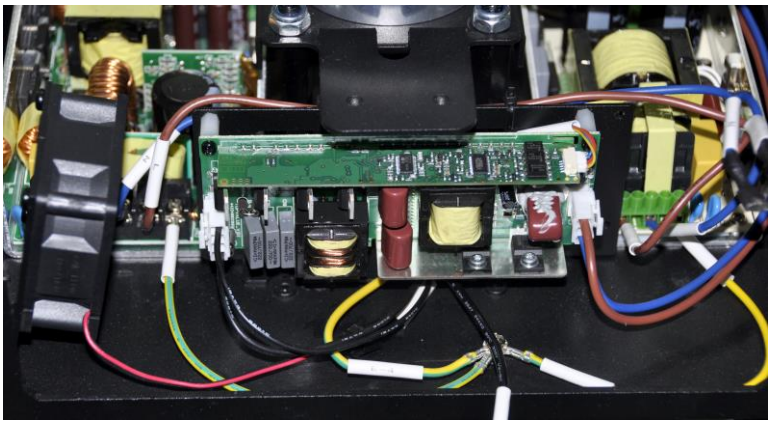

Ballast

A. As the pictures shown above, please replace the cable or cable joints immediately once they've turned yellow.

B. Do maintain the fixtures every two months and make sure that all the screws and terminals have been locked firmly to make sure the normal performance of the fixtures. Negligence of maintenance would cause malfunction of the fixture.

Cleaning:

The cleaning of internal and external optical lenses and/or mirrors must be carried out periodically to optimize light output. Cleaning frequency depends on the environment in

which the fixture operates: damp, smoky or particularly dirty surrounding can cause greater accumulation of dirt on the unit's optics.

- Clean with soft cloth and use normal glass to clean fluid.
- Always dry the parts carefully.
- Clean the external optics at least every 20 days. Clean the internal optics at least every 30/60 days.

Declaration of Conformity

We declare that our products (lighting equipments) comply with the following specification and bears CE mark in accordance with the provision of the Electromagnetic Compatibility (EMC) Directive 2004/108/EC.

EN55103-1:1996; EN55103-2:1996;
EN61000-3-2:2006
EN61000-3-3:2008

&

Harmonized Standard

EN 60598-2-17: 1989 +A2: 1991
EN60598-1:2008+A11:2009
Part 1:General requirements and test

Following the provisions of the low voltage directive 2006/95/EC